IPC-T220HAA-LU
2 MP Smart Hybrid Light 3.0 Fixed Turret Network Camera





- HikAI-ISP for well noise reduction, color correction and image quality improvement
- Motion Detection 3.0 detects persons and vehicles more accurately, reducing false alarms
- Smart Hybrid Light: integrates IR and white lights, 3 supplemental lighting modes
- Built-in microphone for real-time audio security
- Dust and water resistant (IP67)

▪ Specification

Camera	
Image Sensor	1/2.9" Progressive Scan CMOS
Max. Resolution	1920 × 1080
Min. Illumination	Color: 0.003 Lux @ (F1.6, AGC ON), B/W: 0 Lux with IR
Shutter Time	1 s to 1/100,000 s
Day & Night	IR cut filter
Angle Adjustment	Pan: 0° to 360°, tilt: 0° to 75°, rotate: 0° to 360°
Lens	
Lens Type	Fixed focal lens, 2.8 and 4 mm optional
Focal Length & FOV	2.8 mm, horizontal FOV 108°, vertical FOV 59°, diagonal FOV 127° 4 mm, horizontal FOV 87°, vertical FOV 46°, diagonal FOV 105°
Lens Mount	M12
Iris Type	Fixed
Focus	NA
Aperture	F1.6
Depth of Field	2.8 mm: 1.1 m to ∞ 4 mm: 1.2 m to ∞
DORI	
DORI	2.8mm, D: 43 m, O: 17 m, R: 8 m, I: 4 m 4mm, D: 54 m, O: 21 m, R: 10 m, I: 5 m
Illuminator	
Supplement Light Type	IR,White Light
Supplement Light Range	Up to 30 m
Smart Supplement Light	Yes
IR Wavelength	850 nm
Video	
Main Stream	50 Hz: 25 fps (1920 × 1080, 1280 × 720) 60 Hz: 30 fps (1920 × 1080, 1280 × 720)
Sub-Stream	50 Hz: 25 fps (640 × 480, 640 × 360) 60 Hz: 24 fps (640 × 480, 640 × 360)
Third Stream	NA
Video Compression	Main stream: H.265+/H.265/H.264+/H.264, Sub-stream: H.265/H.264/MJPEG
Video Bit Rate	32 Kbps to 8 Mbps
H.264 Type	Baseline Profile,Main Profile,High Profile
H.265 Type	Main Profile
Bit Rate Control	CBR,VBR
Scalable Video Coding (SVC)	YES
Region of Interest (ROI)	1 fixed regions for each stream
Target Cropping	NO
Audio	
Audio Type	Mono sound
Audio Compression	-U: G.711/G.722.1/G.726/MP2L2/PCM/MP3/AAC-LC
Audio Bit Rate	-U: 64 Kbps (G.711ulaw/G.711alaw)/16 Kbps (G.722.1)/16 Kbps (G.726)/32 to 160 Kbps (MP2L2)/16 to 64 Kbps (AAC-LC)

Audio Sampling Rate	-U: 8 kHz/16 kHz
Environment Noise Filtering	-U: Yes
Network	
Protocols	DHCP,QoS,FTP,SSL/TLS,ICMP,RTSP,UDP,HTTPS,HTTP,DNS,IPv6,IPv4,IGMP,RTCP,RTP,DDNS,TCP/IP,UPnP,NTP,SMTP
Simultaneous Live View	Up to 6 channels
API	ISAPI,EZVIZ,ONVIF,ISUP,SDK
User/Host	Up to 32 users 3 user levels: administrator, operator, and user
Security	Password protection, complicated password, watermark, basic and digest authentication for HTTP, WSSE and digest authentication for Open Network Video Interface, security audit log, host authentication (MAC address)
Network Storage	NO
Client	iVMS-4200,Hik-Connect
Web Browser	Plug-in required live view: Chrome 91+, Firefox 88+, Edge 91+
Image	
Image Parameters Switch	Yes
Image Settings	Rotate mode,saturation,brightness,contrast,sharpness,gain,white balance,AGC,adjustable by client software or web browser
Day/Night Switch	Day,Night,Auto,Schedule
Wide Dynamic Range (WDR)	Digital WDR
SNR	≥ 52 dB
Image Enhancement	BLC,HLC,3D DNR
Privacy Mask	4 programmable polygon privacy masks
Interface	
Ethernet Interface	1 RJ45 10 M/100 M self-adaptive Ethernet port
On-Board Storage	NA
Built-in Microphone	Yes,1 built-in microphone
Built-in Speaker	NA
Audio	NA
Alarm	NA
Reset Key	NA
Event	
Basic Event	Video tampering alarm, motion detection (support alarm triggering by specified target types (human, vehicle)), exception
Smart Event	NO
Linkage	Upload to FTP/memory card, notify surveillance center, send email, trigger recording, trigger capture
Deep Learning Function	
Perimeter Protection	NO
Face Capture	NO
General	
Power	12 VDC ± 25%, 0.5 A, max. 6.0 W,Ø5.5 mm coaxial power plug, PoE: IEEE 802.3af, Class 3, max. 7.0 W
Material	Cover: PLASTIC, main body: Metal
Dimension	Ø112 mm × 82 mm (Ø4.41" × 3.23")

Package Dimension	134 mm × 134 mm × 108 mm (5.28" × 5.28" × 4.25")
Weight	Approx. 0.375 kg (0.83 lb.)
With Package Weight	Approx. 0.515 kg (1.14 lb.)
Storage Conditions	-30 °C to 60 °C (-22 °F to 140 °F). Humidity 95% or less (non-condensing)
Startup and Operating Conditions	-30 °C to 60 °C (-22 °F to 140 °F). Humidity 95% or less (non-condensing)
Language	English, Russian, Ukrainian, Arabic, Spanish, French, Portuguese, Turkish, Polish, German
General Function	Heartbeat,mirror,password reset via email,password protection,anti-banding
Flashing Light	NA
Approval	
EMC	CE-EMC: EN 55032:2015+A1:2020, EN 50130-4:2011+A1:2014, EN IEC 61000-3-2:2019+A1:2021, EN 61000-3-3:2013+A1:2019+A2:2021
Safety	CB: IEC 62368-1:2014+A11, CE-LVD: EN 62368-1:2014/A11:2017
Environment	CE-RoHS: 2011/65/EU, WEEE: 2012/19/EU, Reach: Regulation (EC) No 1907/2006
Protection	IP67:IEC 60529-2013

▪ Available Model

IPC-T220HAA-LU(2.8mm)

IPC-T220HAA-LU(4mm)

▪ Dimension

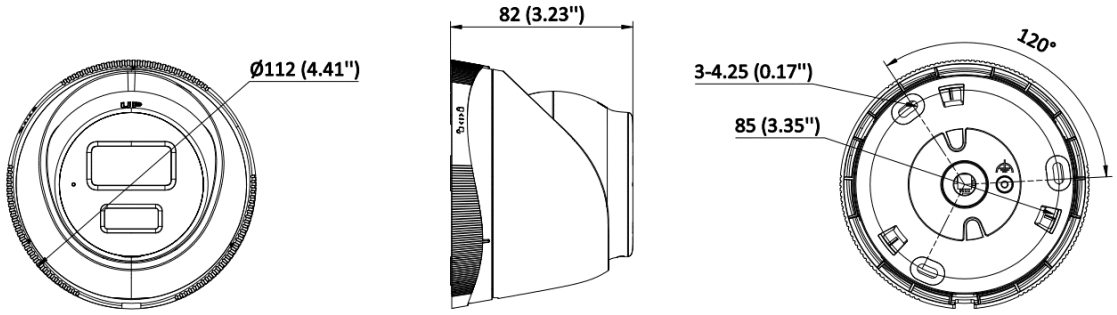

Unit:mm (inch)

▪ Accessory

▪ Optional

DS-1276ZJ-SUS	DS-1280ZJ-S	DS-1275ZJ-SUS	DS-220AZJ-145-WA	DS-1275ZJ-S-SUS

				
DS-1272ZJ-110-TRS	DS-1281ZJ-S	DS-1280ZJ-TR13	DS-220AZJ-130-WA	DS-1271ZJ-110-TRS
				

▪ Installation Methods

Corner Mounting DS-1276ZJ-SUS+DS-220AZJ-130-WA	Junction Box DS-1280ZJ-S	Junction Box DS-1280ZJ-TR13	Vertical Pole Mounting DS-1275ZJ-SUS+DS-1272ZJ-110-TRS	Vertical Pole Mounting DS-1275ZJ-S-SUS+DS-220AZJ-145-WA
			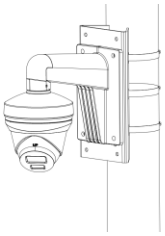	
Wall Mounting DS-220AZJ-145-WA	Wall Mounting DS-1272ZJ-110-TRS+DS-1253ZJ-M	Wall Mounting DS-220AZJ-130-WA	Inclined Ceiling Mounting DS-1281ZJ-S	Pendant Mounting DS-1271ZJ-110-TRS
	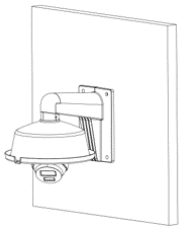		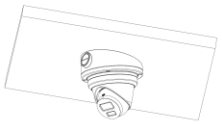	

See Far, Go Further

www.hikvision.com
support@hikvision.com

© Hangzhou Hikvision Digital Technology Co., Ltd. Unless otherwise agreed, Hikvision makes no warranties, express or implied. We reserve the right to introduce modifications without notice.

HiLook